7025-24

12V, 24Ah

Technical Specifications

Sealed, VRLA, LT Technology

The Teledyne Battery Products 7025-24 is a high-capacity sealed VRLA aircraft battery utilizing LT Technology. It provides a 12V nominal voltage, 24Ah capacity, and a 33A emergency rate for 30 minutes. FAA-PMA approved and TSO-authorized, it requires no STCs or modifications for compatible aircraft models. Weighing just 23.5 lbs, it delivers an initial peak power of 1100A at 75°F and offers reliable performance even in colder conditions

Highlights
TSO Authorized
DO-160E Tested
18 Month/1800 Hour Capacity Check Inspection
2 Year Warranty
FAA-PMA

Specifications			
Nominal Voltage, V			12
One Hour Capacity, C1, Ah			24
30 Minute Emergency Rate, C/2, A			33
Weight			23.5 lb (10.7 kg)
Power Performance	23°C (75°F)	-18°C (0°F)	-30°C (-22°F)
Ipp, A	1100	725	500
Ipr, A	825	550	400

Certifications	
American Champion	7ACA, 7EGA, 7GCBC
Beechcraft (Textron)	19A, B19, 23, A23, A23A, B23, C23, A24, A24R, B24R, C24R, E33, E33A, E33C, F33, G33, 35-33, 35-A33, 35-B33, 35-C33, 35-C33A, D-55, D55A, E55, E55A, 58, 58A, 58P, 58TC, G58, 77, 95, B95, B95A, D95A, E95, 95-55, 95-A55, 95-B55, 95-C55, 95-C55A
Cessna (Textron)	120, 140, 150, 150A, 150B, 150C, 150D, 150E, 150F, 150G, 150H, 150J, 150K, 150L, 150M, A150K, A150L, A150M, 170, 172, 172B, 172C, 172D, 172E, 172F (USAF T-41A), 172G, 172H (USAF T-41A), 172I, 172K, 172L, 172M, 172N, F172D, F172E, F172F, F172G, F172H, F172K, F172L, F172M, F172N, 175, 175B, 175C, P172D, 177, 177A, 177B, 188, 188A, 188B, T188C, 310, 310B, 310C, 310D, 310F, 310G, 310H, E310H, 310I, 310J, 310J-1, E310J, 310K, 310P, 310Q, 320, 340
CPAC Inc. (Commander)	112, 112TC, 112B, 112TCA
Piper	PA-22-125, PA-11, PA-22-108, PA-22-135, PA-22-150, PA-22-160, PA-23-235, PA-23-250, PA-28-140, PA-28-150, PA-28-151, PA-28-160, PA-28-161, PA-28-180, PA-28-181, PA-28-201T, PA-28-235, PA-28-236, PA-28R-180, PA-28R-200, PA-28RT-201, PA-28RT-201T, PA-32-260, PA-32-300, PA-32R-300, PA-32RT-300, PA-32RT-300T, PA-36-285, PA-36-300, PA-36-375, PA-38-112, Aerostar: PA-60-600, PA-60-601, PA-60-601P, PA-60-602P, PA-60-700P
Robinson Helicopter Company	R-22, R-22 ALPHA, R-22 BETA, R-22 MARINER, R-44, R-44 II
Socata	GA-7
True Flight	AA-1, AA-1A, AA-1B, AA-1C, AA-5, AA-5A, AA-5B

No STC's or modifications required for any of the models listed.
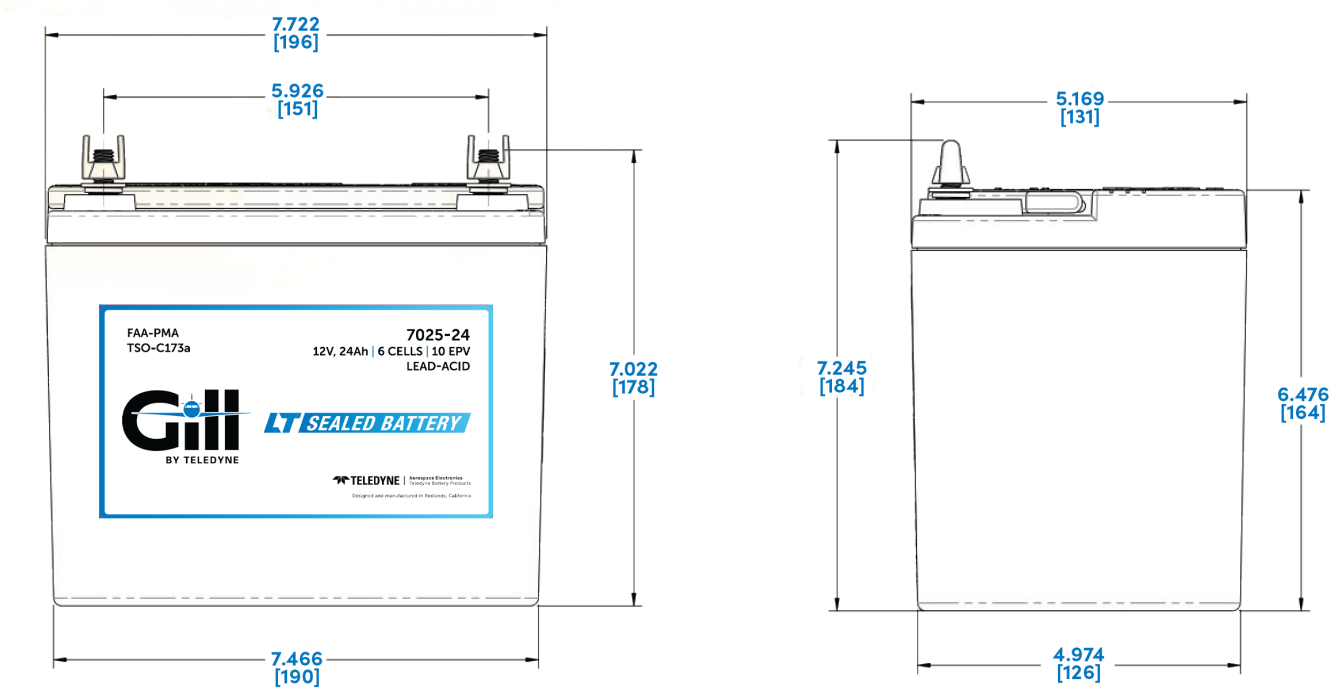
Dimensions (in., [mm])